Fertiliser decomposition in a dryer

8 February 2010

Ribécourt-Dreslincourt (Oise) France

Chemistry
Fertilisers
Decomposition
Organisation / procedures
Corrosion
Process control

THE FACILITIES INVOLVED

The site :

This plant produces, stores, mixes, packages and ships solid NPK-type fertilisers. Manufacturing activity includes binary fertilisers (PK, NP and NK), along with liquid fertilisers (NS and NP) though in lesser quantities.

Onsite operations require administrative approvals, in addition to easements, for the storage of ammonia under heading 1136-A-1. Approvals are also required for the onsite storage of ammonium nitrate in hot solution form (heading 1330-2) and for the storage and use of sulphuric and phosphoric acids (heading 1611).

The specific unit involved :

The accident occurred at the fertiliser drying unit.

Fertilisers exiting the granulator were being dried within a rotating tube. An ammonium phosphate slurry, obtained in a tubular reactor by means of reaction between phosphoric acid and ammonia, was sprayed onto aggregates at the dryer intake. The drying stage relied on hot air produced by a natural gas generator operating at a 7 MW heat release rate.

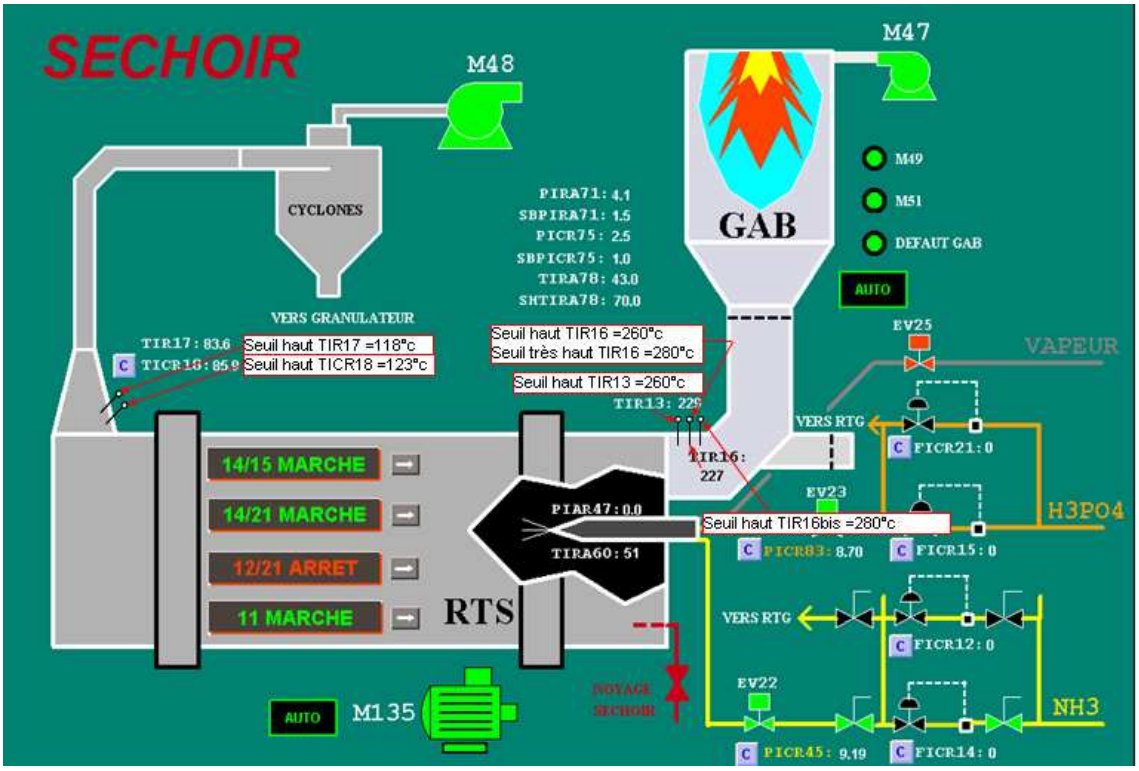

RR

THE ACCIDENT, ITS CHRONOLOGY, EFFECTS AND CONSEQUENCES

The accident :

Around 10:30 am, an employee noticed yellow smoke being emitted from the main chimney of the NPK fertiliser plant. This smoke was caused by a decomposition of the NPK 11-11-32 fertiliser contained in the dryer. To limit the accidental discharge, the technician running the control room shut off the exhaust fan ; the gas resulting from decomposition of this product was thus released into the plant.

Consequences of this accident :

A technician had to be transferred for observation to the Compiègne Hospital after inhaling these nitrous vapours inside the plant.

The internal emergency plan was activated and the local fire crew arrived on the scene at 11:10 am. Once the dryer had been restarted and flooded, fertiliser decomposition could be stopped, with the responsible material removed from the dryer and stored for a full day before reuse by the operator.

Photograph downloaded from the Internet / Expompierdu60

The European scale of industrial accidents

By applying the rating rules applicable to the 18 parameters of the scale officially adopted in February 1994 by the Member States' Competent Authority Committee for implementing the '*SEVESO*' directive on handling hazardous substances, and in light of information available, this accident can be characterised by the four following indices :

At the time of the accident, no substance covered under the SEVESO Directive was being emitted into the environment, hence the index relative to hazardous materials released was set equal to "0". Since a technician had to be hospitalised after inhaling the nitrous vapours, the index relative to human and social consequences was scored a "1" (see Parameter H5). No environmental consequences were recorded, resulting in a "0" assigned to the environmental consequences index. Given the lack of detail on property damage costs, the economic consequences index was not rated either.

The parameters composing these indices and their corresponding rating protocol are available from the following Website : http://www.aria.developpement-durable.gouv.fr

THE ORIGIN, CAUSES AND CIRCUMSTANCES SURROUNDING THIS ACCIDENT

On Thursday, 28 January 2010 around 7 pm, a leak in Tank No. 3 containing diluted phosphoric acid (10% to 30% P_2O_5) forced technicians to transfer tank contents in concentrated acid form (53% / 54% P_2O_5) into Tanks 1 and 2, thereby causing a considerable dilution to occur: Tank 1 at 42% P_2O_5, Tank 2 at 38% P_2O_5. Tank No. 3 was corroded, and its shell was leaking at a level 1.5 m from the bottom.

On 8 February, the dryer was being shut down to proceed with the maintenance of a chain conveyor. This task was conducted in accordance with a protocol that called for stopping the inflow of raw materials, turning off the dryer and introducing a minimum regime for the burner set at 35%, followed by a cooling phase. These guidelines were respected.

The use of a lower concentration phosphoric acid (38%) than that typically used (53%) caused a thermal disequilibrium of the dryer installation. The slurry of ammonium phosphate powder on aggregates therefore contained more water to be evaporated, resulting in a lower dryer outlet gas temperature. Since this temperature had been set at 110℃, the drying inlet air temperature was automatically raised in order to compensate for this disequilibrium. A temperature close to 300℃ was recorded at the dryer inlet instead of th e more customary 240℃.

This technically-motivated shutdown procedure transitioned the plant into a dry granulation operating mode with periodic interruptions of the rotating tubes, to ensure the product stayed dry in the granulation loop and avoid clogging by product riprap on the tube walls. Nonetheless, the temperature reached at the dryer inlet, after the cooling phase (according to a procedure that was strictly followed), was 170℃ in stead of 110℃ due to the high initial temperature (300℃). Start-up temperature for the dry fertiliser decomposition process (above 170℃) was reached inside the dryer in let tube, thus leading to fertiliser decomposition and the release of yellow smoke. No alarm was sounded since the alarm threshold (370℃) for the hot air intake temperature probes h ad not yet been exceeded.

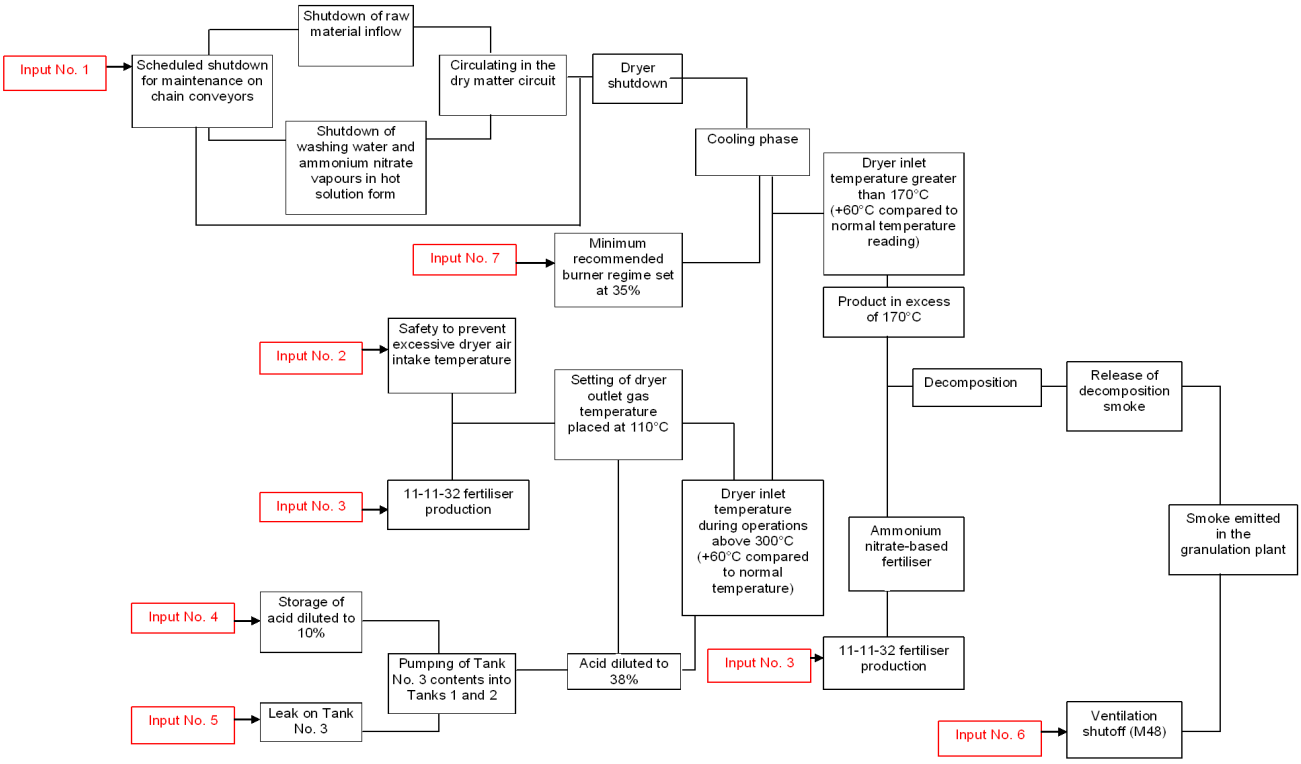

Causal tree of the accident

ACTIONS TAKEN

The assigned inspectors, notified upon activation of the internal emergency plan, arrived onsite and participated in a meeting devoted to the causes and circumstances of the accident. One of the inspectors also took part at the exceptional Corporate Committee for Hygiene, Safety and Working Conditions (CHSCT) assembly held subsequent to the accident. For the annual inspection, the safety management system (SMS) topic discussed was "Process Controls".

The site operator agreed to adopt several measures, namely :

- modification of the manufacturing standards to incorporate an alarm threshold on the hot air intake temperature adapted to each manufacturing process ;
- an alarm threshold for the ammonium nitrate-based fertilisers increased to 260℃ ;
- revision of the maintenance shutdown procedure for the purpose of specifying temperature controls and thresholds on the various steps required for the installation shutdown routine ;
- creation of a response guide as part of the internal emergency plan, in order to avoid having a technician shut off ventilation in the event of a toxic gas release.

LESSONS LEARNT

Process organisation, procedures, controls and oversight :

This accident was due to a series of events that had occurred 10 days prior, at which time the contents of a corroded tank were drained into tanks containing more heavily concentrated phosphoric acid. Plant operations continued in a degraded mode, without conducting any analysis of the impacts generated by use of a more diluted acid at the level of the dryer (the case herein) on both the loss of process controls and the release of nitrous vapours.

Moreover, a visual inspection of the acid tanks would have led to observing the corrosion responsible for one of the tank cracks. The inspection and maintenance of all plant equipment are required to prevent against the installation "ageing" phenomenon, providing the setting for operations with an appropriate level of safety.

Managing the feedback loop :

The measures adopted by the operator focus on avoiding any repeat of such an accident, particularly through the rapid detection of an anomaly during the drying step, by means of revising the maintenance shutdown procedure, strengthening controls and refining temperature thresholds.

At the time of the accident, an alarm threshold set at a lower temperature than that corresponding to dry fertiliser decomposition would have allowed technicians to intervene quickly, since the inclusion of an alarm threshold specific to each manufacturing set-up is now expected to more quickly detect and better control process deviations.

The strategy being targeted on the safety management system topic of "process control" lies within the scope of measures to improve the understanding of risks related to installation start-up in degraded mode. Continued operations at a level comparable to the reference thus require more thorough monitoring of the state of degradation for the specific function, along with the implementation of remedial actions and a close recording of their ultimate efficiency. Such an approach assumes greater controls on vulnerable installations and machinery through adapted human and equipment resources.

More in-depth technician training relative to both the process steps to be followed and the types of actions carried out under degraded operating conditions (procedures, response guide, etc.) would serve to erect barriers capable of preventing similar accidental situations.