Butadiene leak in a petrochemical unit

December 14th , 2000

Lavéra – [Bouches-du-Rhône] France

Pipeline
Polymerisation
Organisation / Design
Clogging
Abandoned channel
Internal Contingency Plan

THE INSTALLATIONS IN QUESTION

The site :

The establishment in question is located within the commune of Martigues in the Lavéra petrochemical complex which includes 9 operators, 7 of which carry high-level SEVESO classifications. The Naphtachimie company is authorised by Prefectoral Order to operate a steam cracker and a butadiene production unit. It is classed as high-level SEVESO.

The installation concerned by the accident is the Butadiene unit which handles the C4 fraction from the steam cracker or imported.

It manufactures two finished products:

- raffinate 1 which is used by the neighbouring BP polyisobutene production unit,
- butadiene 1-3 which is stored, then shipped in its totality.

The facility can be broken down into 6 sections:

- elimination of hydrocarbons into C3 by distillation,
- principal scrubbing and secondary scrubbing,
- predegassing and degassing of the solvent,
- compression of the recycled gas,
- regeneration of the solvent,
- distillation of the butadiene.

The accident occurred in this last section.

The installations concerned

The butadiene distillation section consists mainly of a tower D51, a reflux vessel F51 and two reboilers E51 and E51C, only one of which functions in normal operation. The back-up reboiler (E51) is connected to tower D51 via a line which includes a branch connection leading to this reboiler's safety valve via an 8" pipe.

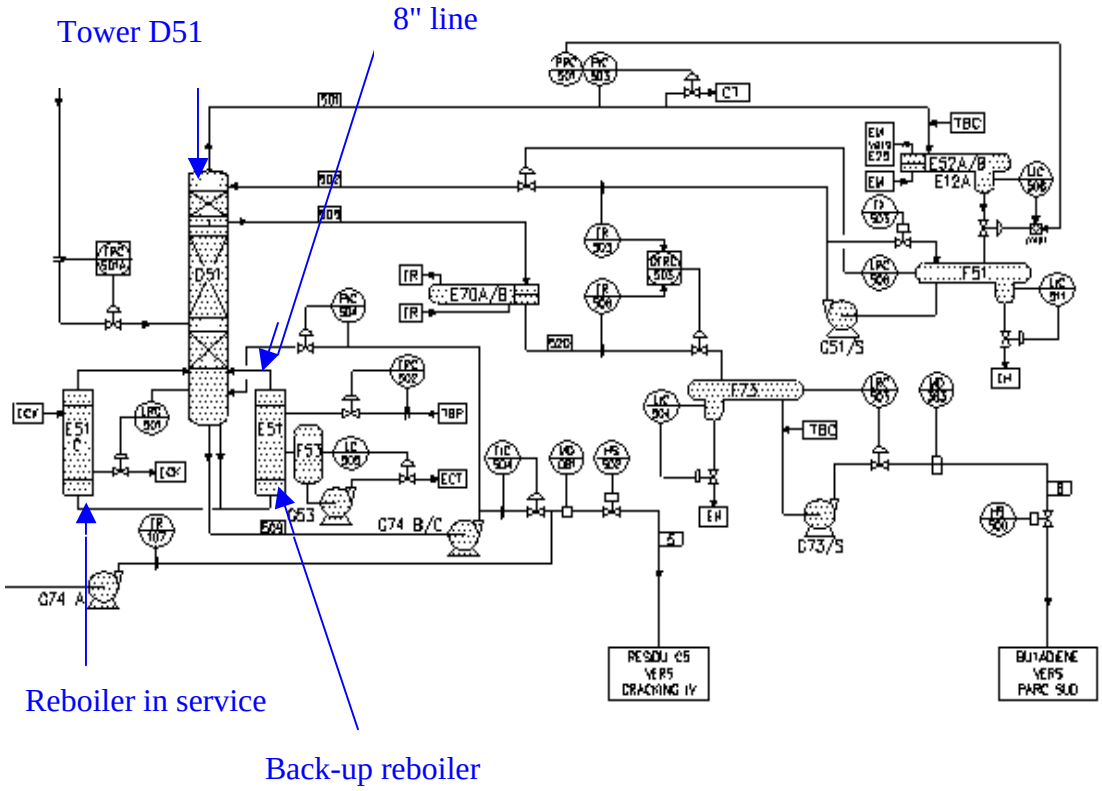

THE ACCIDENT, ITS BEHAVIOUR AND CONSEQUENCES

The accident:

On December 14, at 8.10 pm, a butadiene leak triggered the gas alarm. The leak was caused by the rupture of an 8" supply line running toward the protection valve of one of the 2 reboilers of the butadiene purification tower. A cloud of gaseous butadiene was formed and spread into the unit and outside its boundaries, causing the emergency shut-down of the installation. The internal contingency plan was put into action, water curtains installed and traffic at the site was stopped. The personnel of the facility and the neighbouring units downwind were confined.

At 8.35 pm, the unit's personnel were able to isolate the leaking line by closing the manual valves. The rate of the steam cracker and the PIB unit was reduced.

At 8.50 pm, the public was informed (a taped message for the opinion leaders of Lavéra). The authorities were informed at 9 pm.

At 9.40 pm, the internal contingency plan was called off and at 10 pm, the public was informed that the alert was cancelled by a taped message.

The Consequences:

The consequences were limited owing to the rapid intervention of the emergency response teams, the immediate implementation of water curtains and the use of explosion-proof equipment eliminating all ignition source.

Approximately 7 tonnes of butadiene were released into the atmosphere. Property damage was minor.

European scale of industrial accidents

By applying the rating rules of the 18 parameters of the scale made official in February 1994 by the Committee of Competent Authorities of the Member States which oversees the application of the 'SEVESO' directive, the accident can be characterised by the following 4 indices, based on the information available.

The parameters that comprise these indices and the corresponding rating method are indicated in the appendix hereto and are available at the following address: http://www.aria.ecologie.gouv.fr

Butadiene is a substance classified as a "highly flammable liquefied gas"; its Seveso threshold is thus 200 t. The 7 t of butadiene released into the atmosphere correspond to 3.5% of the threshold, which explains the "dangerous materials released" index of 3 (parameter Q1).

ORIGIN, CAUSES AND CIRCUMSTANCES OF THE ACCIDENT

The origin of the accident is attributed to the design of the supply line of the reboiler's valve which formed a dead branch in which the gaseous butadiene accumulated, polymerising in an anarchic manner without being able to exit due to the inverse slope.

At the time of the accident, tower D51 was operating at 3.6 bar and was processing 17 tons of raw butadiene per hour. The reboiler in question (E51) was not in service. It was isolated on the steam side by a control valve, although remained under gas in order to act as a back-up for the other reboiler.

The pipe ruptured under the pressure generated by the formation of polymer in the dead branch (referred to as "popcorn"). The pipe was opened like a tulip over approximately 1 meter along the lower generatrix.

ACTION TAKEN

The manufacturer modified the installations as follows:

- The dead branch which caused the accident was removed. The slope of this line was modified in order to prevent "popcorn" from accumulating in the future. This line is now vertical. The same is true for the pipe of the same type on the other reboiler and the reflux vessel. For this reason, the valves of the devices were brought closer together.

- All the manholes on the fractionating tower were equipped with a internal solid plug and an external solid plug. To prevent the formation of popcorn, the space between these two plugs must be purged every 2 weeks.

- The inlet lines of main valves on the fractionating tower (D51) and scrubber (D24) were modified with a branch connection separated by a valve.

- An inhibitor injection branch connection was created on the intake side of the pumps.

Certain procedures were indicated in addition to the modifications made on the installation:

- The plated reboiler E51 must be maintained in normal operation.
- Tower D51, as well as the condensers, reboilers and the reflux vessel, must be passivated prior to start-up.

The operator compiled a specific procedure relative to the formation of popcorn and the monitoring of the line. The following rules are established by this procedure:

- Limit the influx of oxygen into the installation.
- Prevent the formation of rust in the equipment during restart by means of prior passivation.
- Do not process the C4 fraction containing peroxides.
- Ensure the injection of inhibitor into the flows containing more than 75% butadiene.
- Limit the volume and the existence of butadiene-rich dead zones.
- It is imperative that the horizontal dead zones be done away with.

A monitoring plan was established:

- Monitoring of manholes, elbows and the horizontal sections of lines by radiography every 3 months to detect the possible formation of popcorn.
- The updating of inspection plans with this monitoring procedure.

LESSONS LEARNED

The accident shows that the risk of "popcorn" formation must be taken into consideration in this type of installation.

The formation of "popcorn" can be attributed to the influx of oxygen into the tower via the manholes.

The *popcorn* is a rigid polymer which can form in the butadiene1-3 in concentrations above 75%, in the presence of a polymerisation initiator such as oxygen, peroxides, rust or when two metals are in contact under mechanical stress.

The product resembles that of popcorn or a granular mass resembling meringue. Translucent or white in colour, it yellows in the presence of oxygen and can, over time, spontaneously ignite releasing very dense brown smoke. To avoid this fire hazard, the popcorn must always be handled wet.

The dead zones where the butadiene stagnates promote the development of popcorn.

Popcorn growth is stimulated by the temperature. A temperature increase of 2°C reduces the time necess ary to double its mass by 50%.

Popcorn is insoluble in butadiene. It develops in both the liquid and gaseous phase.

When polymerisation takes place, it releases a considerable amount of heat and exerts pressure on the outer envelop until it ruptures. Polymerisation growth then stops and the butadiene is released.

The solution thus consists in avoiding dead volumes, the influx of oxygen and to establish a strict installation monitoring plan. The measures taken by the manufacturer are oriented in this direction.